CODE	DESCRIPTION	POS.	GR.
K070033496A	BASIS	1	
279309A72	FRONT WHEEL DIAMETER.35	2	
256764A	SHAFT FOR FRONT WHEEL	3	
L020043900A	HEAT EXCHANGERS GROUP	4	
J300003500A	COMPRESSOR FH210Y-E+4TM232TFBYY-52	9	
G0610A	COMPRESSOR ACCESSORIES ASSY	10	J300003500A
K070034195A	WATER CONTAINER	11	
K070034295A	WATER CONTAINER COVER	12	
K070036295A	WATER CONTAINER HANDLE	13	
K070021095A	FLOAT	14	
J060005000B	MOTOR	15	
K070036100A	FAN D.180	16	
K070034489A	FRONT PLASTIC PART	17	
K070034559A	WATER CONTAINER GLASS	18	
K070035589A	TOP BONNET WITH KEYBOARD	19	
K070033895A	GLASS	20	
K070033900A	KEYBOARD SURFACE FILM	21	
K200001100A	CONTROL BOARD	22	
K200005600A	TEMPERATURE+HUMIDITY SENSOR BOARD	23	
K160017900A	10 POLES FLAT CABLE L=530MM	24	
K160018000A	4 POLES FLAT CABLE L=300 MM	25	
K070033596B	CENTRAL MOUNT	26	
K070033696C	CONVEYOR	27	
K070034660A	SIDE PANEL	28	
K070034760A	INNER CABLE REEL	29	
K070034860A	OUTER CABLE REEL	30	
K070034960A	CABLE REEL COVER	31	
K070035089A	LOWER HANDLE	32	
K070035189A	UPPER HANDLE	33	
K070035260A	INLET GRID	34	
K070035396A	AIR FILTER	35	
G0614A	WATER TANK DOOR GROUP	36	
K070035796A	BASKET FOR ADDICTIONAL FILTERS	37	
K070035860A	DRAINING CAP	38	
K070035989B	HANDLE MOUNT	39	
K190004089A	SCREW CAP	40	
K050002700A	LEFT HANDLE SPRING	41	
K050002800A	RIGHT HANDLE SPRING	42	
K070035400A	ACTIVE CARBON FILTER	43	
K070038100A	HEPA FILTER	44	
K070038200A	PHOTOCATALYTIC FILTER	45	
K070036796A	RIGHT FILTER SADDLE	46	
K070036896A	LEFT FILTER SADDLE	47	
K210023700A	MICROSWITCH	48	
279386B	FLAT CABLE FASTENER I.D.18 MM	49	
K160018100A	POWER CABLE	50	
K160018200A	GENERAL WIRING	51	
K200005900A	POWER BOARD	52	
K210017600A	PROBE	53	
K210016200A	TANK MICROSWITCH CABLE	54	
276318A	PUSH PULL	55	
K210024200A	HEATING RESISTANCE	56	

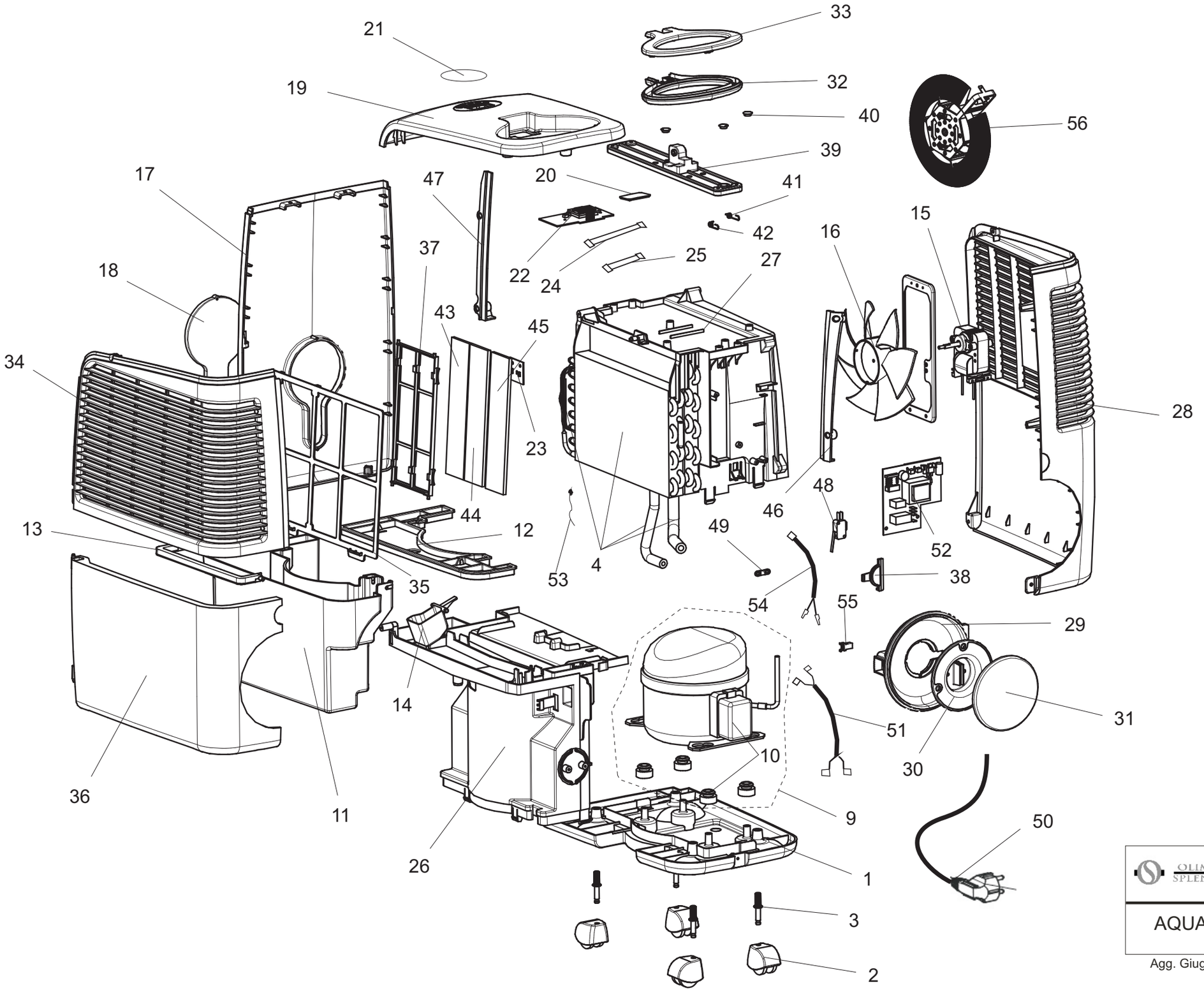

OLIMPIA SPLENDID
Via G. Rossa 1-3
Gualtieri (R.E.)

AQUARIA THERMO

Agg. Giugno 2010 - RIF 116.00